SCHEMATIC DIAGRAM

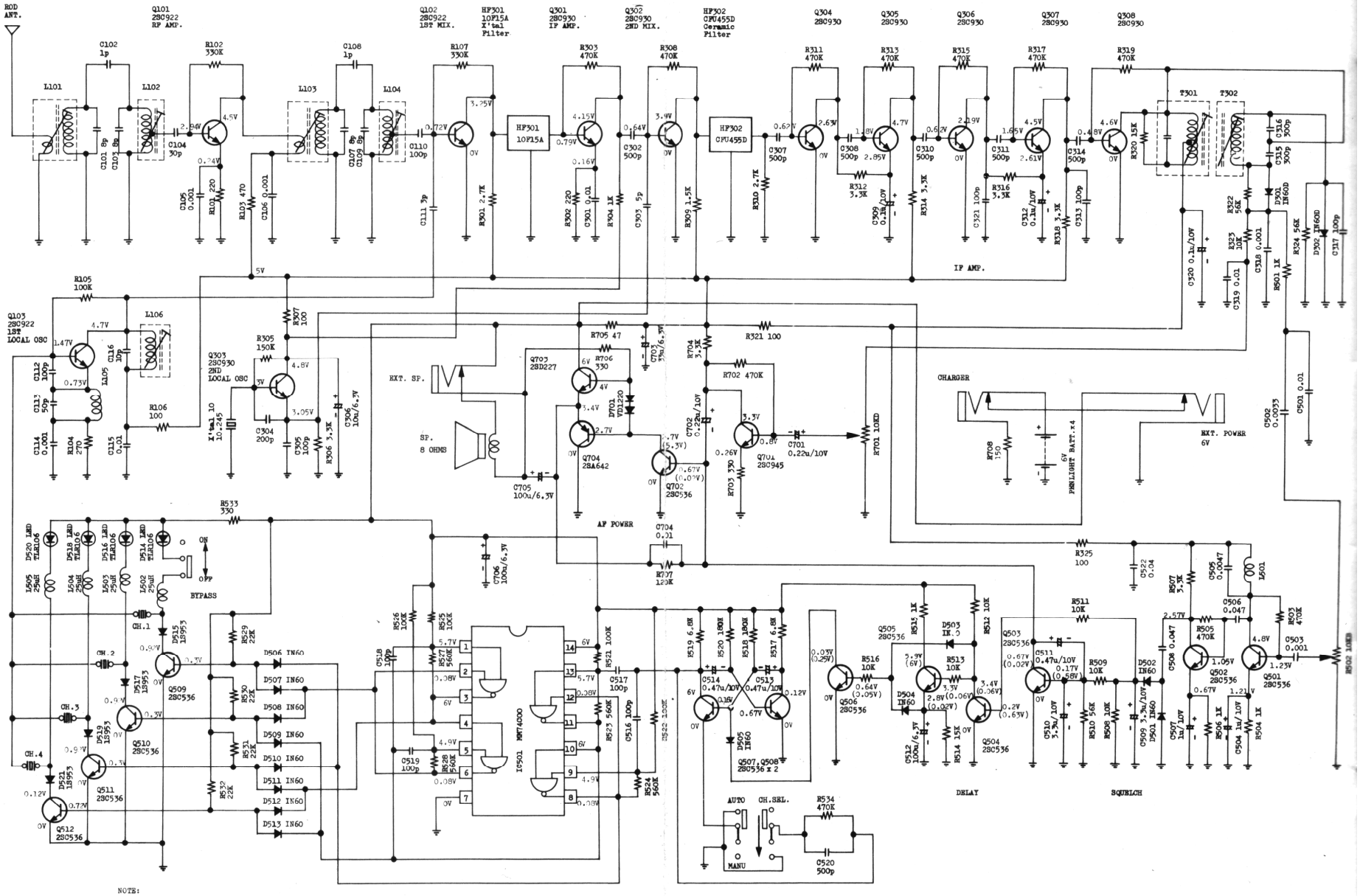

NOTE:

1. All resistance values are in "ohm", K=1,000.
2. All capacitance values less than 1.0 are in "mfd" and greater than 1.0 are in "pfd".
3. Voltage values indicated are measured at no signal. However, terminal voltages of Q503, 504, 505, 506 and Q702 are measured at squelch open position and parenthesized voltages are at squelch threshold position.