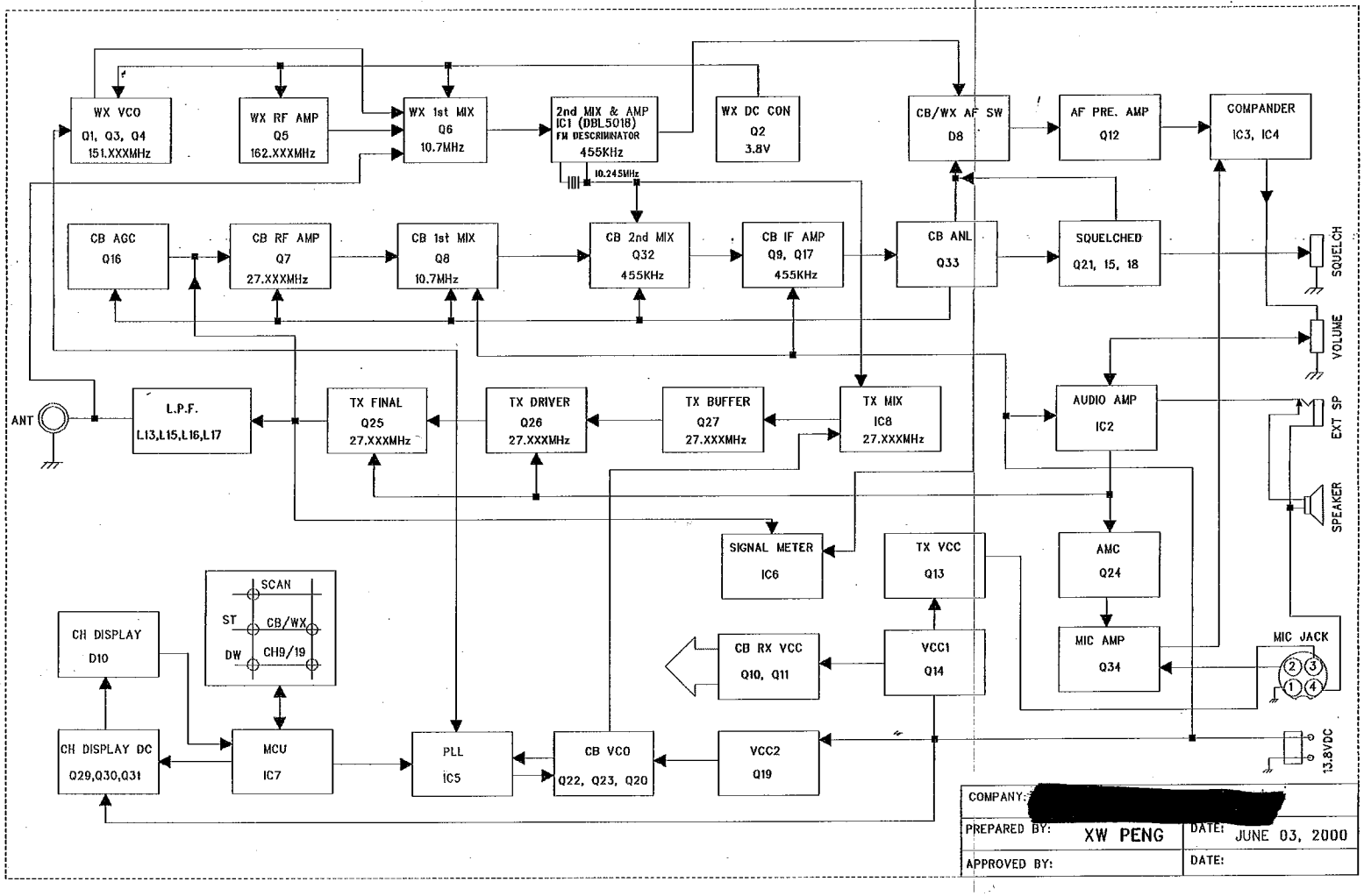CB 18WX ST II BLOCK DIAGRAM FOR COBRA