Microphone Wiring Diagram

Alpha 10 Max - Model AM-1000

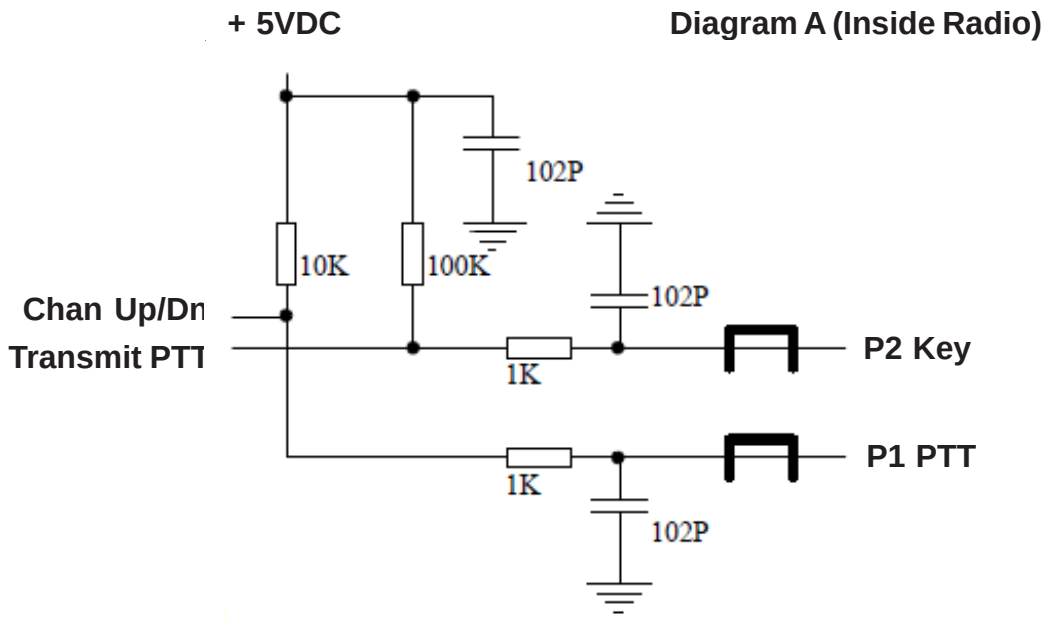

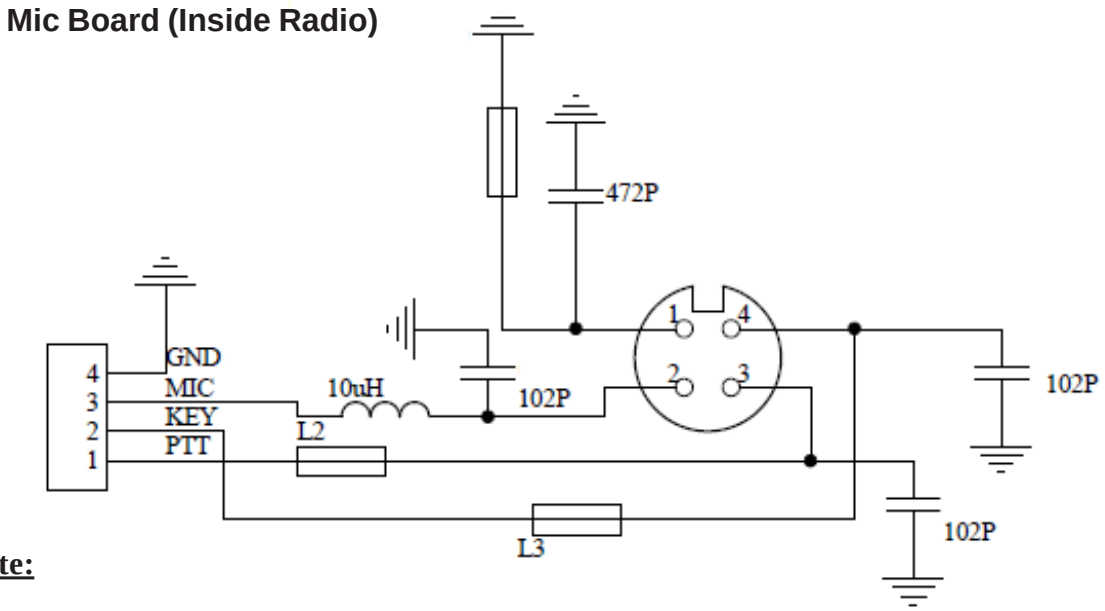

Note:

The Alpha 10 Max Mic is wired like a standard 4 pin Cobra Mic. The Microphone that is shipped with the radio has Channel Up/Down Buttons on the front. Initially, there were warnings about the +5VDC on Pin 4 causing damage when using non factory microphones. This is **Not** the case!

Any Standard Replacment Mic can be used on the Alpha 10 Max without any damage!

No Modifications are necessary when using any alternative mic! (RK56, Astatic 636L, Power Mics, etc)

Copyright (C) 2011 - www.alpha10radios.com