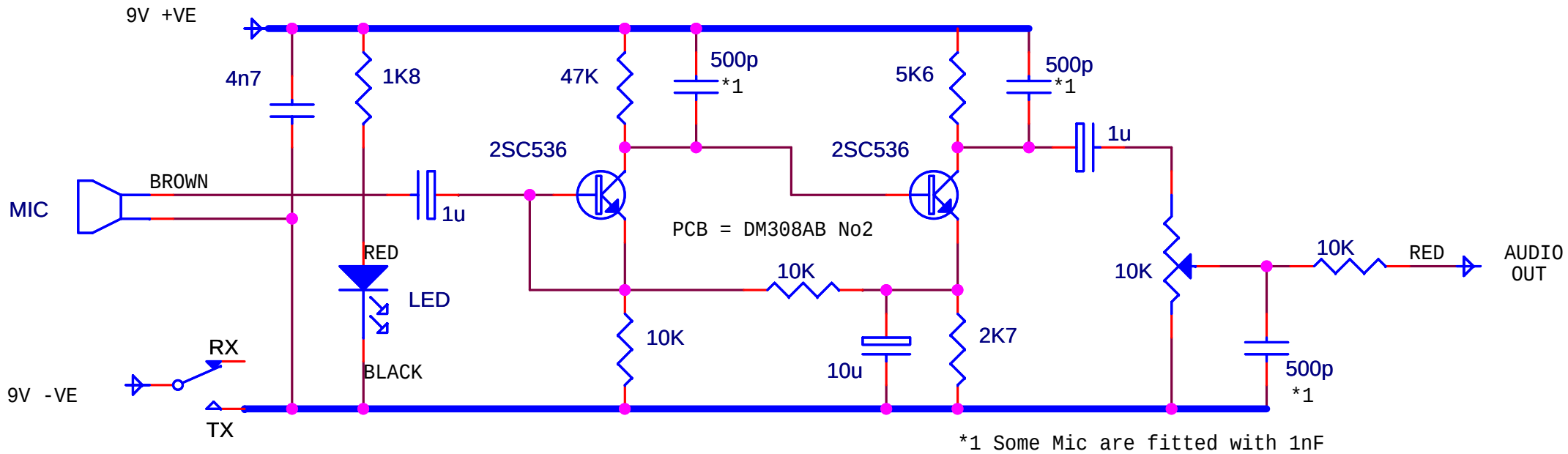

*1 Some Mic are fitted with 1nF

DENSEI DM308A-B2

DRAWING BY: Rick Jackson Euro Radio Co		
Title DENSEI DM308A MICROPHONES		
Size	Document Number DENSEI_DM308A.SCH	Rev A1
Date: Sunday, November 12, 2006	Sheet 1 of 1	