JB 12B/RB NOTES

- All resistances are in ohms. ± 10% unless otherwise noted.
- All voltages are measured from chassis ground and are ± 10%.
- Relay is in receive boost position.
- Stand-by switch is in receive boost position.

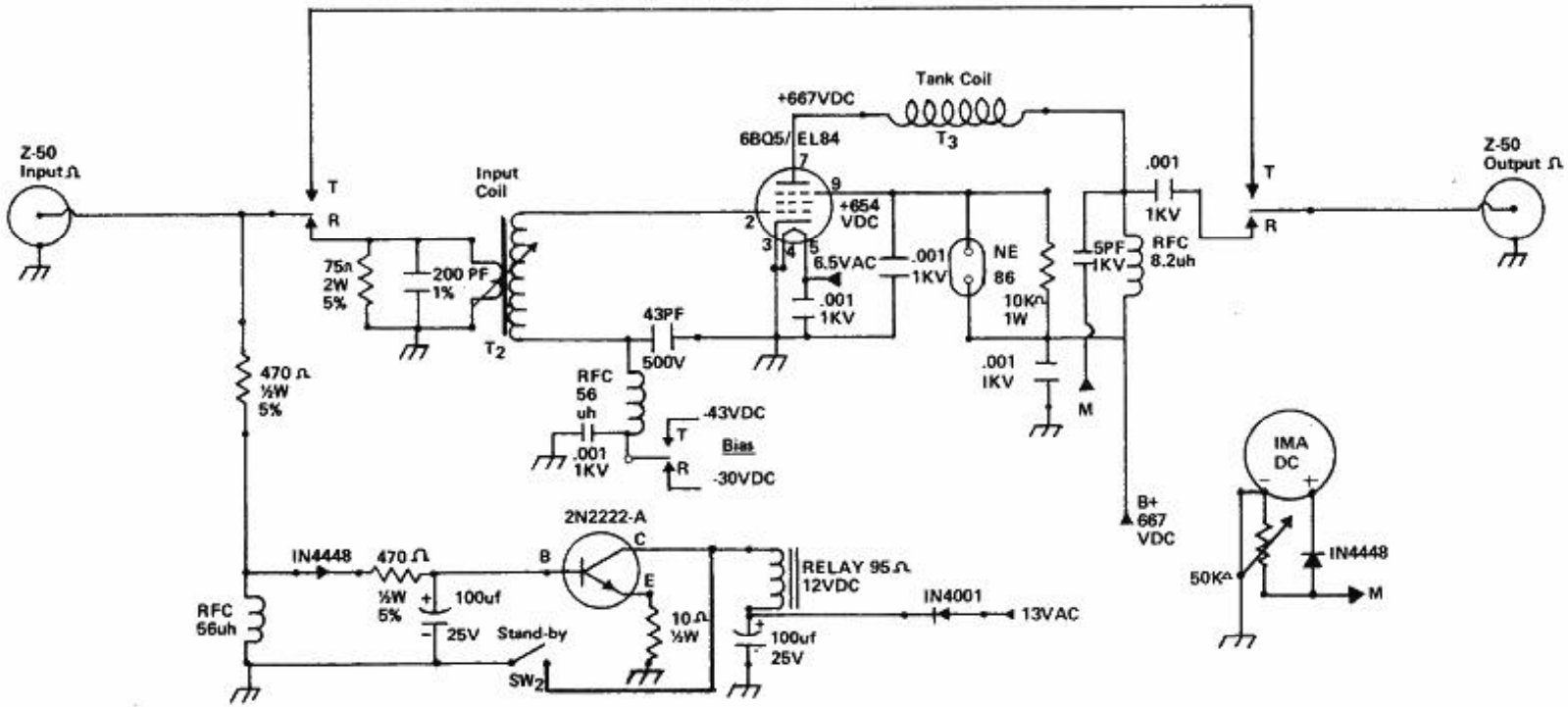

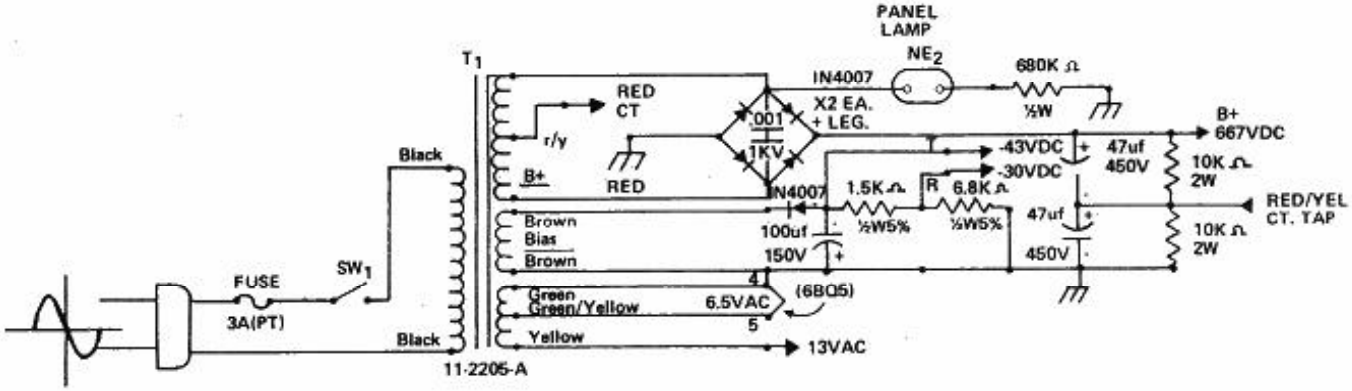

U.S.A.

JB–12–B/RB	SERIES B	
RECEIVE BOOST AMPLIFIER		
WAWASEE ELECTRONICS CO. INC.		
SYRACUSE, INDIANA 46567		
NOV. 1977	CK. R.M.	DR. B.A.