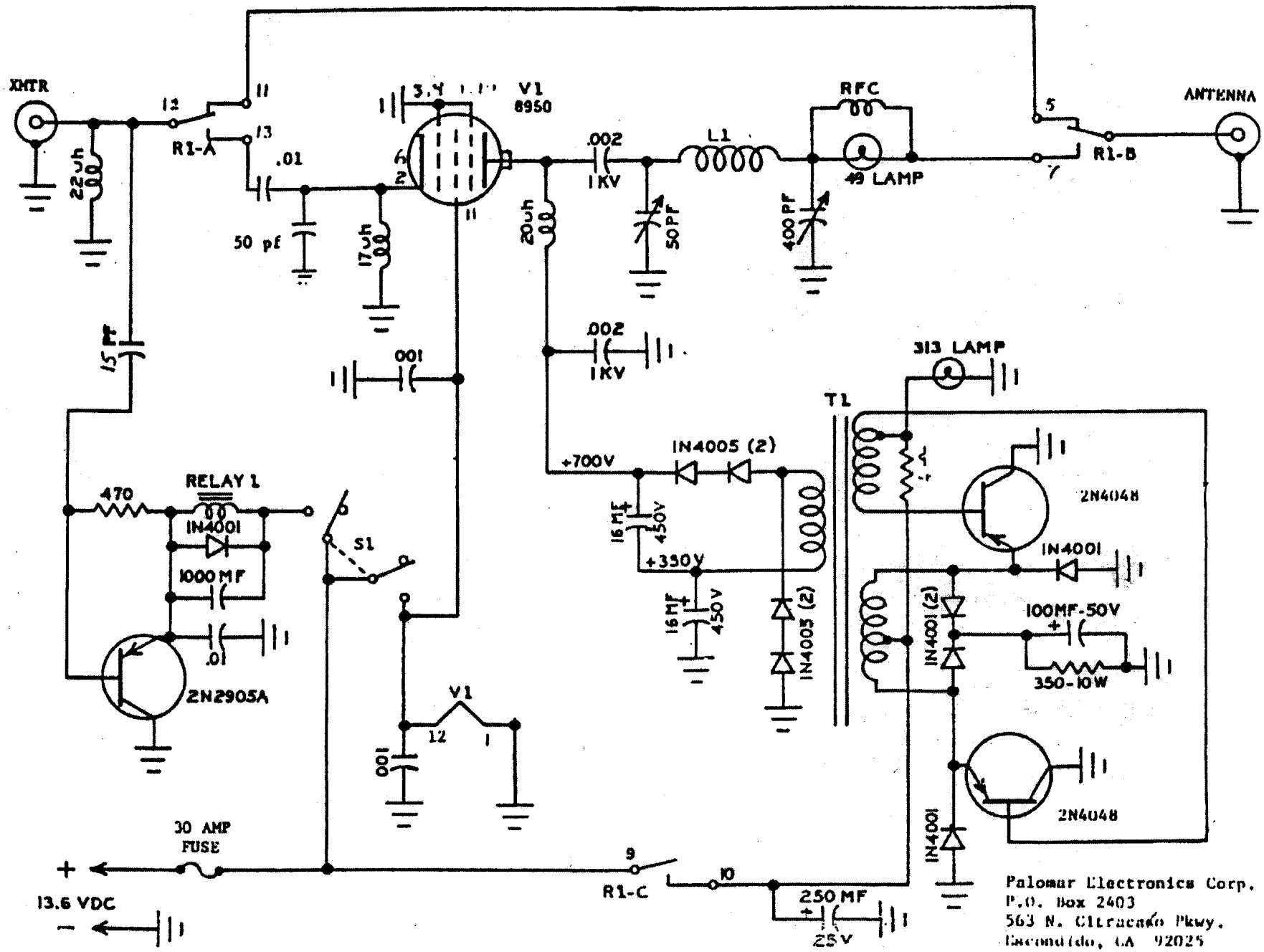
XMTR
22uh
12
11
R1-A
13
.01
50 pf
17uh
V1
8950
3,4
6
2
11
.002
1KV
L1
RFC
49 LAMP
50PF
400PF
5
7
R1-B
ANTENNA
20uh
.002
1KV
15 pf
.001
313 LAMP
T1
+700V
IN4005 (2)
16MF
450V
+350V
16MF
450V
IN4005 (2)
470
RELAY 1
IN4001
1000MF
.01
2N2905A
S1
V1
12
1
.001
IN4001 (2)
100MF-50V
350-10W
2N4048
IN4001
2N4048
IN4001
30 AMP
FUSE
+
13.6 VDC
−
9
R1-C
10
250 MF
25V
Palomar Electronics Corp.
P.O. Box 2403
563 N. Citracado Pkwy.
Escondido, CA 92025